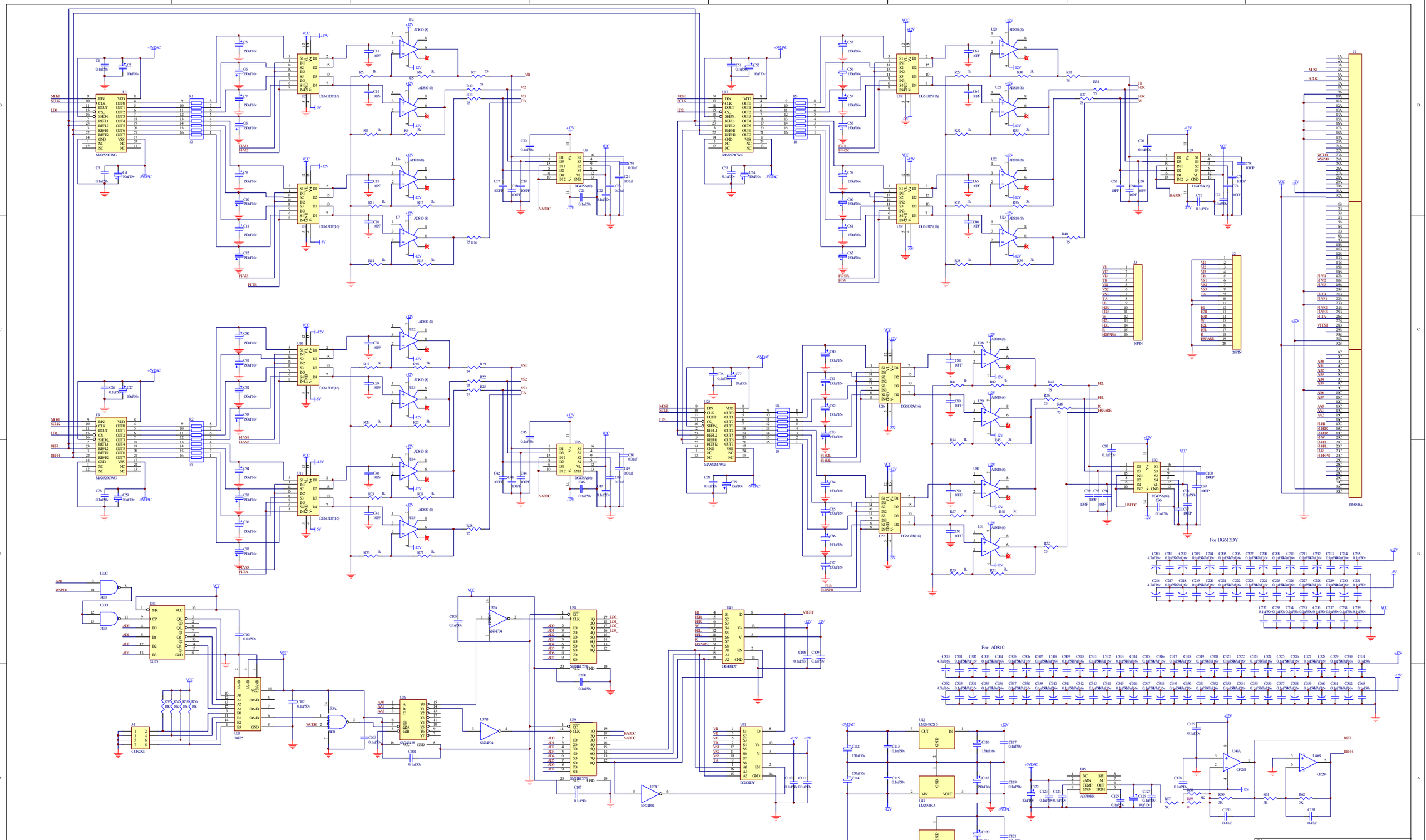
MAX525CWG
DG613DY(16)
DG605A(16)
AD810 (8)
For DG613DY
For AD810
DB968A
74175
74165
CD82N4
SN74HC574
SN74HC138
SN74H04
DG681DY
LM2940CS-5
LM2990S-5
AD780BR
OP284
Lick Universal Camera (Lick-U-Cam)
new CDB Board
Size
D
Number
Revision
Date: 16-Aug-2011
Sheet of
File: C:\LUCAM\new-DCAM\LCdc-new\DCAMPCBs.SchDoc
Drawn By: