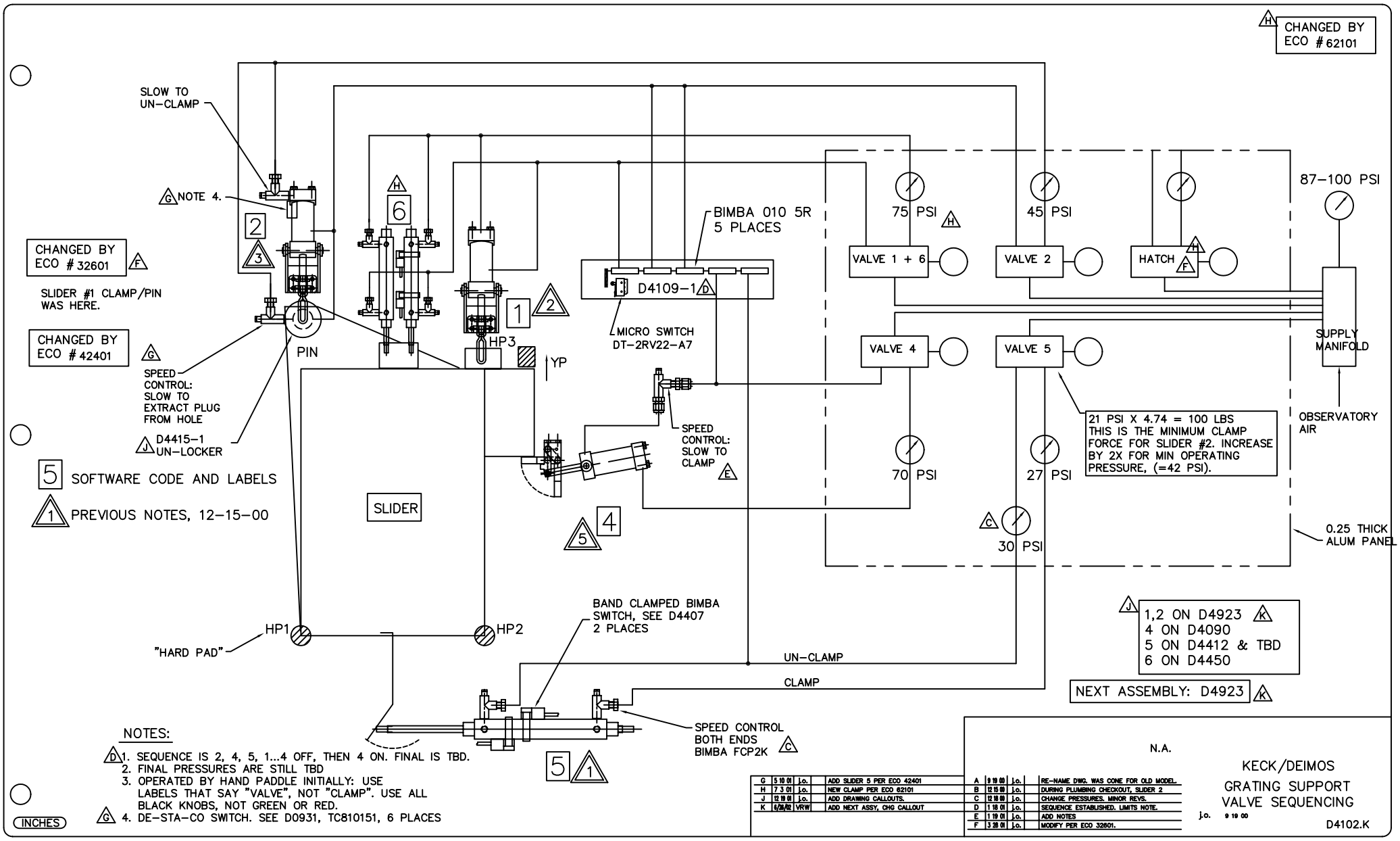
CHANGED BY ECO # 62101
SLOW TO UN-CLAMP
NOTE 4.
CHANGED BY ECO # 32601
SLIDER #1 CLAMP/PIN WAS HERE.
CHANGED BY ECO # 42401
SPEED CONTROL: SLOW TO EXTRACT PLUG FROM HOLE
D4415-1 UN-LOCKER
PIN
HP3
YP
SLIDER
HP1
HP2
"HARD PAD"
BIMBA 010 5R 5 PLACES
D4109-1
MICRO SWITCH DT-2RV22-A7
SPEED CONTROL: SLOW TO CLAMP
BAND CLAMPED BIMBA SWITCH, SEE D4407 2 PLACES
UN-CLAMP
CLAMP
SPEED CONTROL BOTH ENDS BIMBA FCP2K
75 PSI
45 PSI
87-100 PSI
VALVE 1 + 6
VALVE 2
HATCH
VALVE 4
VALVE 5
SUPPLY MANIFOLD
OBSERVATORY AIR
21 PSI X 4.74 = 100 LBS THIS IS THE MINIMUM CLAMP FORCE FOR SLIDER #2. INCREASE BY 2X FOR MIN OPERATING PRESSURE, (=42 PSI).
70 PSI
27 PSI
30 PSI
0.25 THICK ALUM PANEL
1,2 ON D4923
4 ON D4090
5 ON D4412 & TBD
6 ON D4450
NEXT ASSEMBLY: D4923
5 SOFTWARE CODE AND LABELS
1 PREVIOUS NOTES, 12-15-00
NOTES:
1. SEQUENCE IS 2, 4, 5, 1...4 OFF, THEN 4 ON. FINAL IS TBD.
2. FINAL PRESSURES ARE STILL TBD
3. OPERATED BY HAND PADDLE INITIALLY: USE LABELS THAT SAY "VALVE", NOT "CLAMP". USE ALL BLACK KNOBS, NOT GREEN OR RED.
4. DE-STA-CO SWITCH. SEE D0931, TC810151, 6 PLACES
INCHES
N.A.
KECK/DEIMOS
GRATING SUPPORT
VALVE SEQUENCING
j.o. 9 19 00
D4102.K
G 5 10 01 j.o. ADD SLIDER 5 PER ECO 42401
H 7 3 01 j.o. NEW CLAMP PER ECO 62101
J 12 19 01 j.o. ADD DRAWING CALLOUTS.
K 6/28/02 VRW ADD NEXT ASSY, CHG CALLOUT
A 9 19 00 j.o. RE-NAME DWG. WAS CONE FOR OLD MODEL.
B 12 15 00 j.o. DURING PLUMBING CHECKOUT, SLIDER 2
C 12 18 00 j.o. CHANGE PRESSURES. MINOR REVS.
D 1 18 01 j.o. SEQUENCE ESTABLISHED. LIMITS NOTE.
E 1 19 01 j.o. ADD NOTES
F 3 28 01 j.o. MODIFY PER ECO 32601.