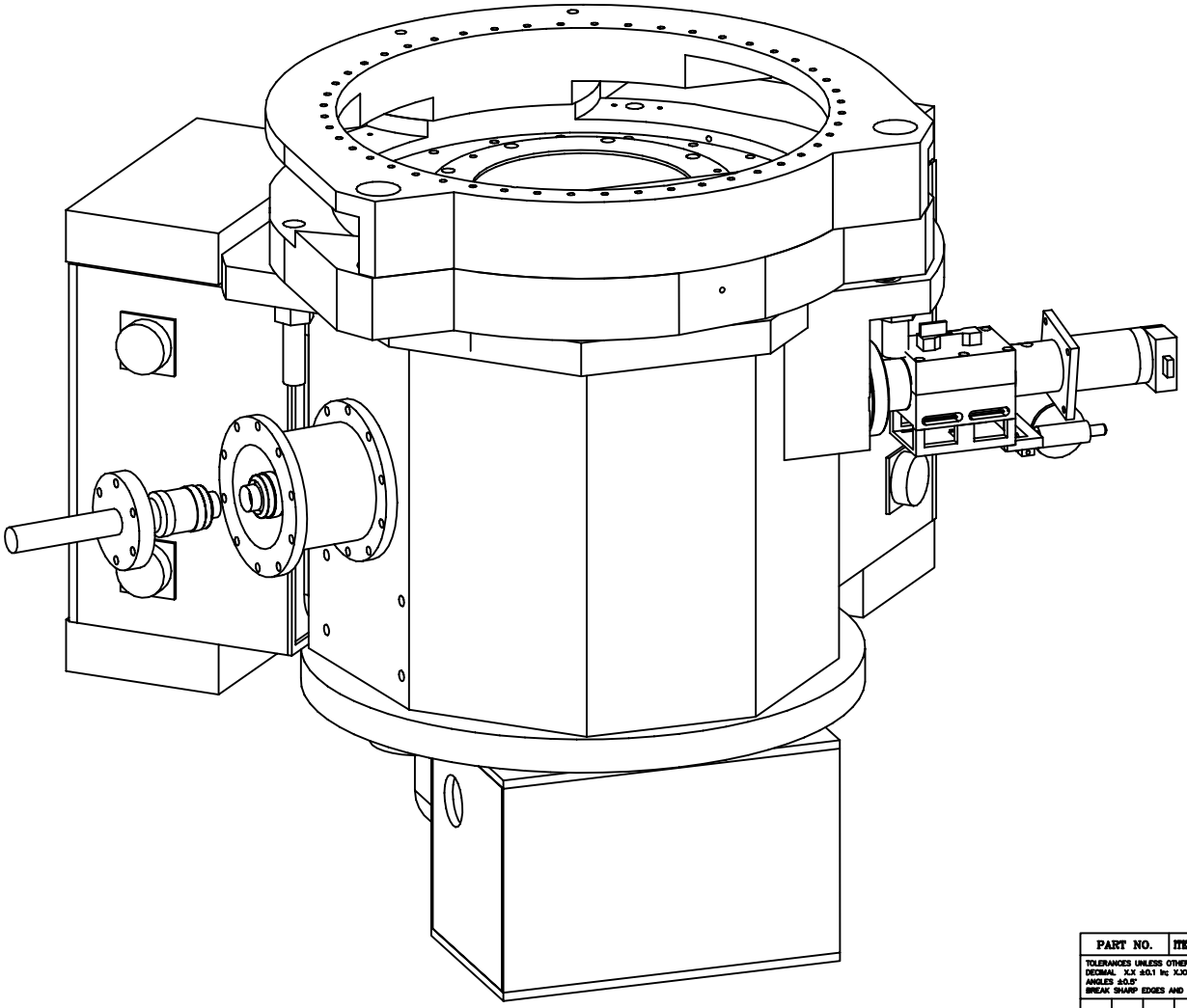

PART NO.	ITEM	QTY	DESCRIPTION	MATERIAL	PART NO.	ITEM	QTY	DESCRIPTION	MATERIAL
TOLERANCES UNLESS OTHERWISE NOTED: DECIMAL .X ±0.1 in; .XX ±0.01 in; .XXX ±0.005 in; .XXXX±0.0001 in ANGLES ±0.5° FINISH 125 MICRO INCHES BREAK SHARP EDGES AND CORNERS 1/64 MAXIMUM.				SCALE: N/A	UNIVERSITY OF CALIFORNIA LICK OBSERVATORY				
MARK	DATE	DRWN	CHKD	REVISION	KECK/DEIMOS				
					DEWAR ASSY SOLID				
					DESIGN		NAME	UNIT(S)	DWG. NO. SHT. 1 OF 5
					DRAWN C.A.O.	2/22/01	APPROVED		D7160.P
					CHK'D		DATE		