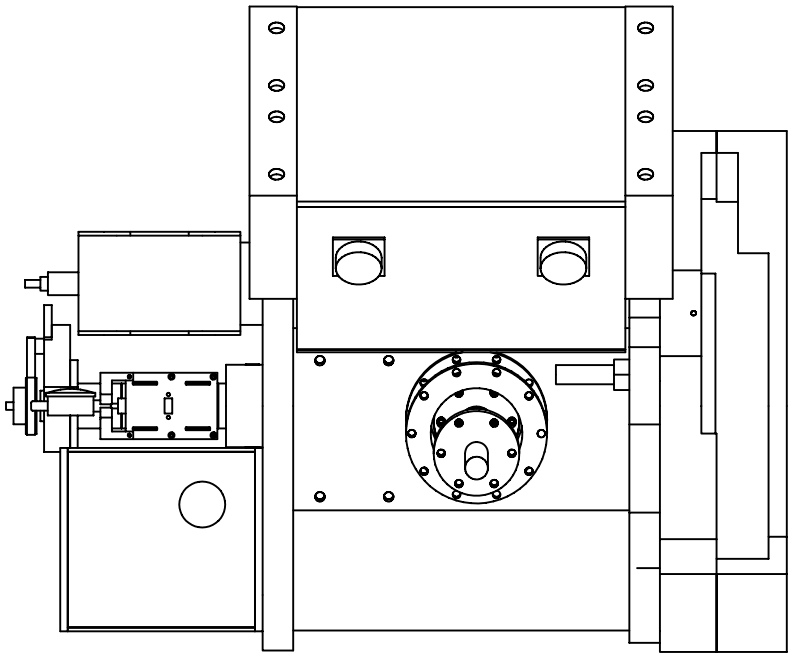

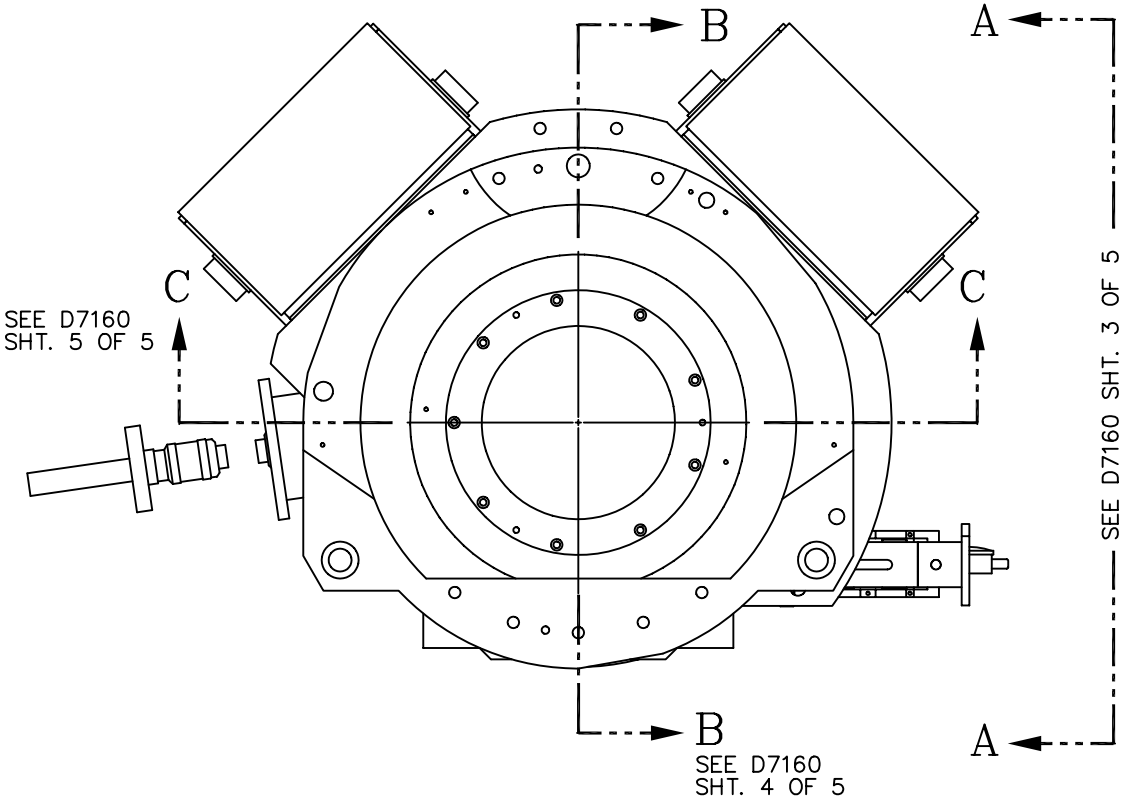

(-1) DEWAR ASSEMBLY

1 REQ'D

NEXT ASSY – D0001

NOTES:

1. SOLID MODEL ASSEMBLY IS D7160, SHT. 1 OF 5.
2. FASTENERS NOT SHOWN.
3. REFERENCE D5130 FOR TARGET SPACINGS.

PART NO.	ITEM	QTY	DESCRIPTION	MATERIAL	PART NO.	ITEM	QTY	DESCRIPTION	MATERIAL
	32				–	16	2	ø1/8 ROLL PIN	SST
	31				D7327-1	15	1	LOCATING PLATE	ALUM
	30				~~D7470-5~~	~~14~~	~~4~~	~~CABLE LOOM ASSY~~	
	29				D7356-1	13	2	LINEAR MOTION ACTUATOR	
	28				D7355-1	12	1	MOTION SWITCH ASSY	
	27				D7149-1	11	1	COLDFINGER ASSY	
	26				D7340-5	10	1	FOCUS COUPLING ASSY	
D7358-2	25	1	MOUNTING BRACKET	ALUM	D7475-1	9	1	FLEXURE ASSY	
D7358-1	24	1	MOUNTING BRACKET	ALUM	D7936-1	8	1	CONNECTOR, COLDFINGER/SPIDER	
	23	1	GEAR		D7356-2	7	2	ADAPTER	
	22	1	GEAR		D7933-1	6	1	BACK PLANE ASSY	
	21	1	GEAR BELT		D7143-1	5	1	DEWAR, BACK PLATE	
D7315-3	20	2	BRACKET ASSY		D7140-1	4	1	DEWAR, CCD HOUSING	
–	19	2	GALIL MOTOR		D7318-1	3	1	DEWAR FRNT PL. ASSY	
D7500-1	18	2	ELEC. BOX		D7142-1	2	2	MOUNT DEWAR/FLEXURE	
D7520-1	17	1	ELEC. BOX		D7145-1	1	1	MNTG. PL. DEWAR/SHUTTER & CAMERA	

TOLERANCES UNLESS OTHERWISE NOTED:
DECIMAL .X ±0.1 In; .XX ±0.01 In; .XXX ±0.005 In; .XXXX±0.0001 In
ANGLES ±0.5°
FINISH 125 MICRO INCHES
BREAK SHARP EDGES AND CORNERS 1/64 MAXIMUM.

SCALE: N/A

MARK	DATE	DRWN	CHKD	REVISION
P	2/26/01	CAO		REV & REDRAWN PER AS BUILT

UNIVERSITY OF CALIFORNIA
LICK OBSERVATORY

KECK/DEIMOS

DEWAR
ASSEMBLY

DRWN		NAME	UNIT(S)
DRWN C.A.O.	2/22/01	APPROVED	
CHK'D		DATE	

DWG. NO. SHT. 2 OF 5
D7160P