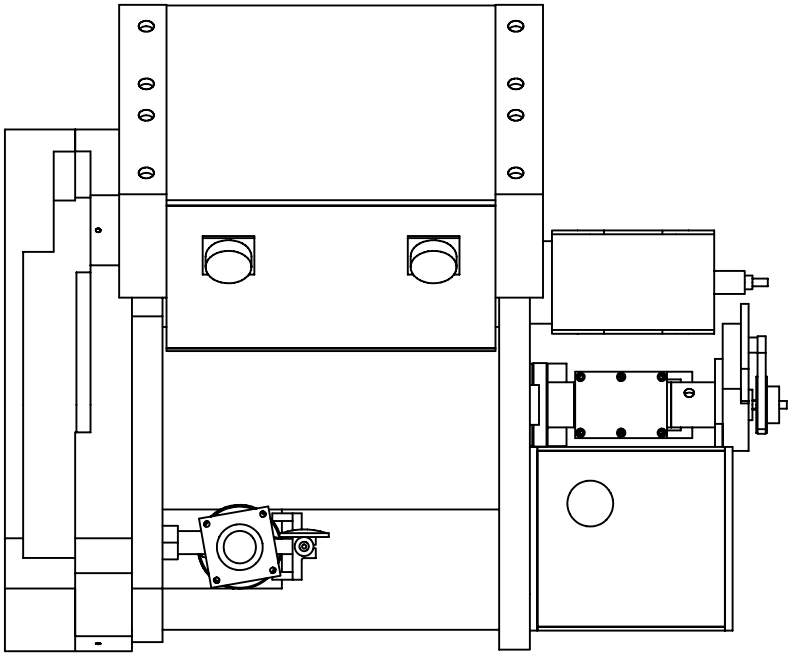

VIEW A—A

FROM D7160 SHT. 2 OF 5

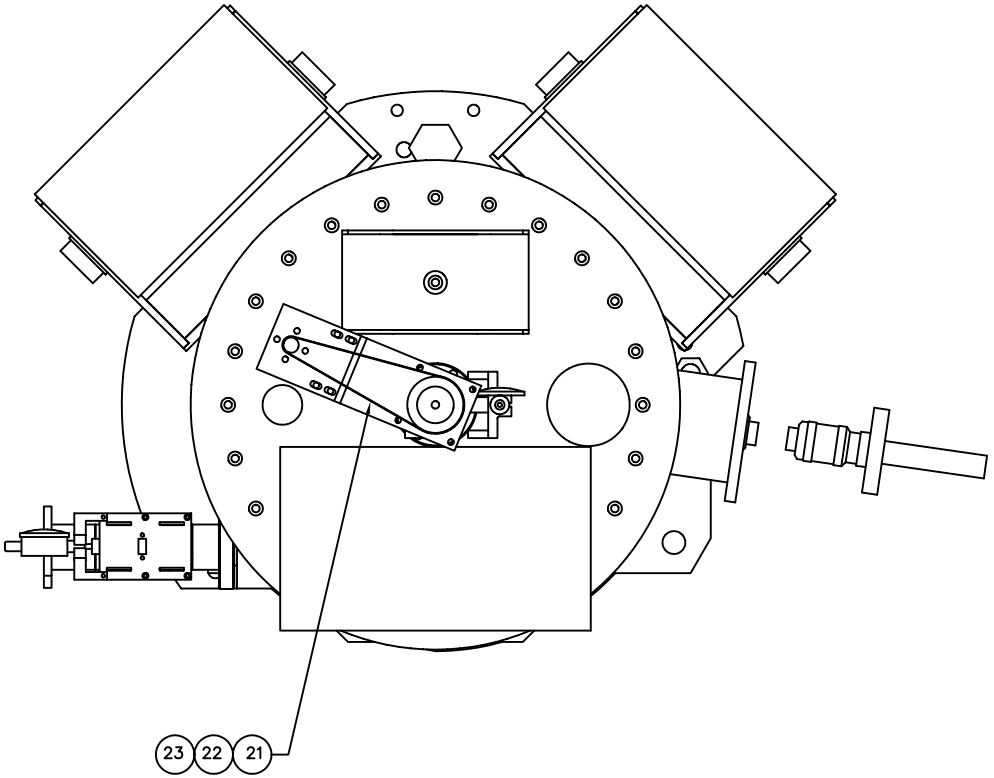

PART NO.	ITEM	QTY	DESCRIPTION	MATERIAL	PART NO.	ITEM	QTY	DESCRIPTION	MATERIAL

TOLERANCES UNLESS OTHERWISE NOTED:
DECIMAL .X ±0.1 in; .XX ±0.01 in; .XXX ±0.005 in; .XXXX±0.0001 in
ANGLES ±0.5°
FINISH 125 MICRO INCHES
BREAK SHARP EDGES AND CORNERS 1/64 MAXIMUM.

SCALE: N/A

MARK	DATE	DRWN	CHKD	REVISION

UNIVERSITY OF CALIFORNIA
LICK OBSERVATORY

KECK/DEIMOS

DEWAR
ASSY

DESIGN			NAME	UNIT(S)
DRWN	C.A.O.	2/22/01	APPROVED	
CHK'D			DATE	

DWG. NO. D7160P SHT. 3 OF 5